POWERBOX®

TWO-SPEED GEARBOX

双速齿轮箱

LICAT RACKS & GEARS

ROMANI COMPONENTS

APPLICATION AND BENEFITS

LICAT, with its strong record in innovation and production of power transmission units and gearboxes, is proud to present to machine tool manufacturers, the new POWERBOX, with a configuration ideal for widely used applications.

The universal machine tool (turning machine, milling and gantry machines,cnc machines), is designed for working with materials of different hardness and strength. Brushless AC motors give constant power for slow speed ranges.

Our POWERBOX applications, offer constant power for tools with two different speed ranges:

1) fast speed drive - ratio i=1
2) slow speed drive - ratio i≠1

优点及应用

LICAT得益于在传动单元及齿轮变速箱制造领域所具有的丰富知识与经验，我们新推出的POWERBOX系列产品在尺寸及结构上具有了更加广泛的适用性。

常规的机床设备，包括车床、铣床、龙门铣床及数控加工中心等，通常在设计中要求能够加工不同硬度的材料，针对上述设备所存在的交流电机在恒功率区内，速度调速范围窄的问题，POWERBOX系列产品能够做到在两种不同的速度范围下，为刀具提供恒定的功率。

在恒定功率下，不同的速度范围：

1）高速驱动-变速比 i=1
2）低速驱动-变速比 i≠1

EXAMPLE TORQUE POWER CURVES FOR 47kW MOTOR
WITH LICAT-POWERBOX i=1,00 - i=4,00

扭矩功率范围示例，47kW的电机安装LICAT-POWERBOX后，i=1.00 -i=4.00的扭矩、功率曲线

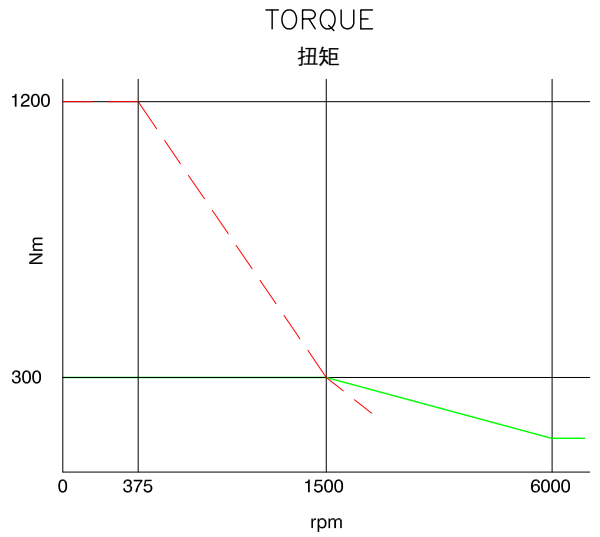

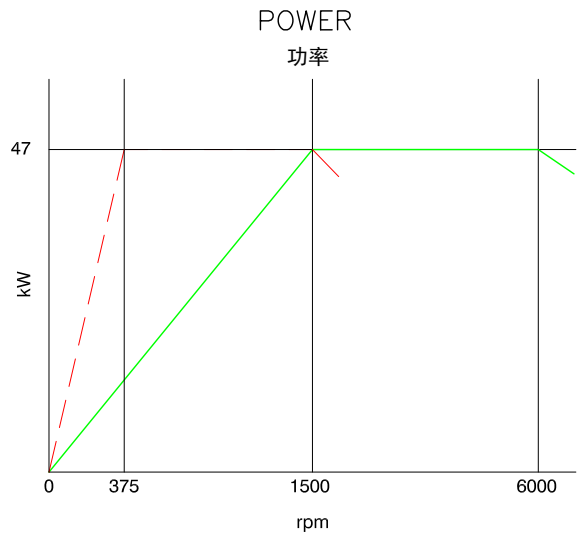

1) — — — Motor -POWERBOX assembly in i=4,00
电机与POWERBOX以速比i=4.00安装

2) ——— Motor -POWERBOX assembly in i=1,00
or mothor without POWERBOX
电机与POWERBOX以速比i=1.00安装或者没有安装POWERBOX

ORDERING DRAWING
订货图

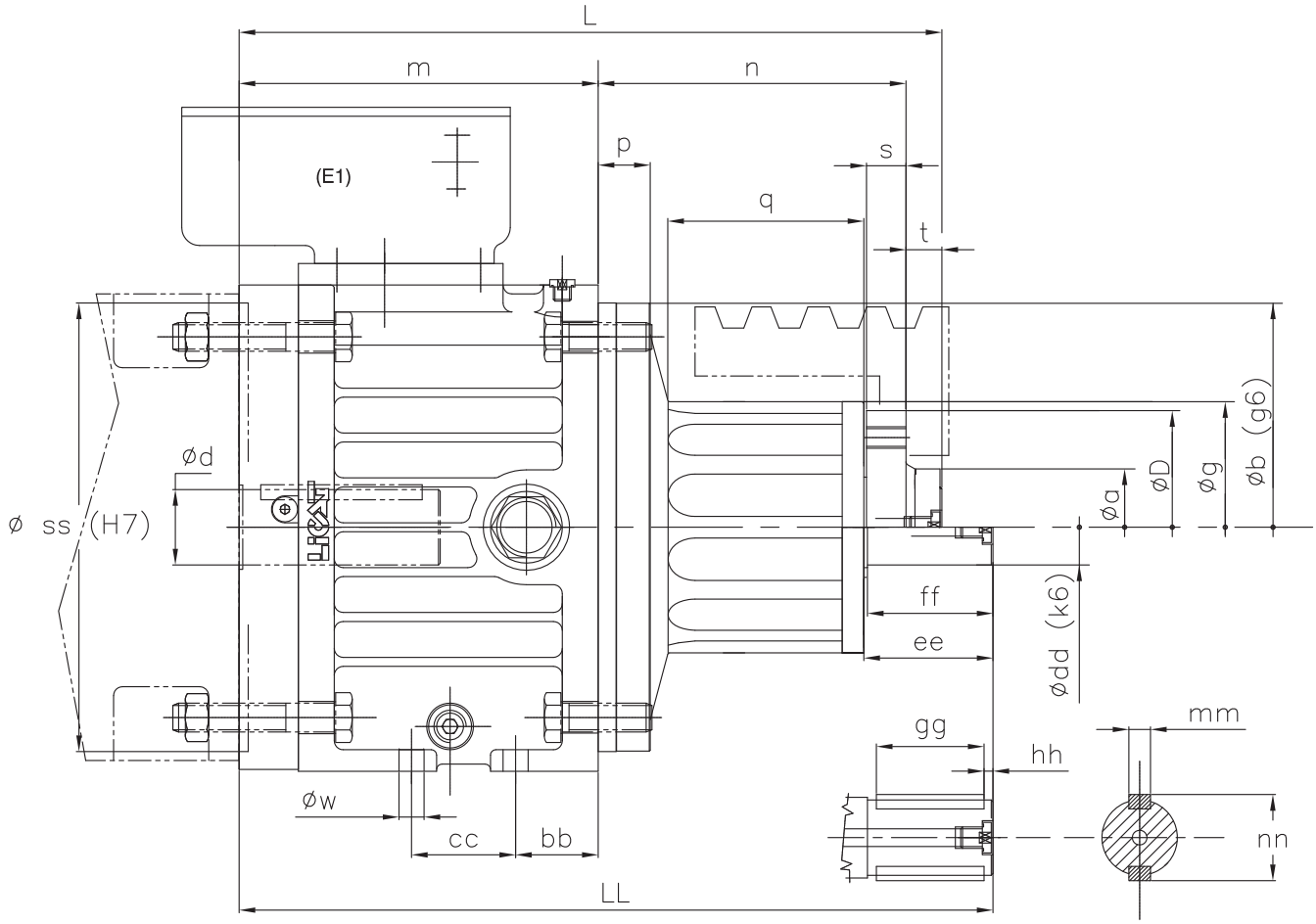

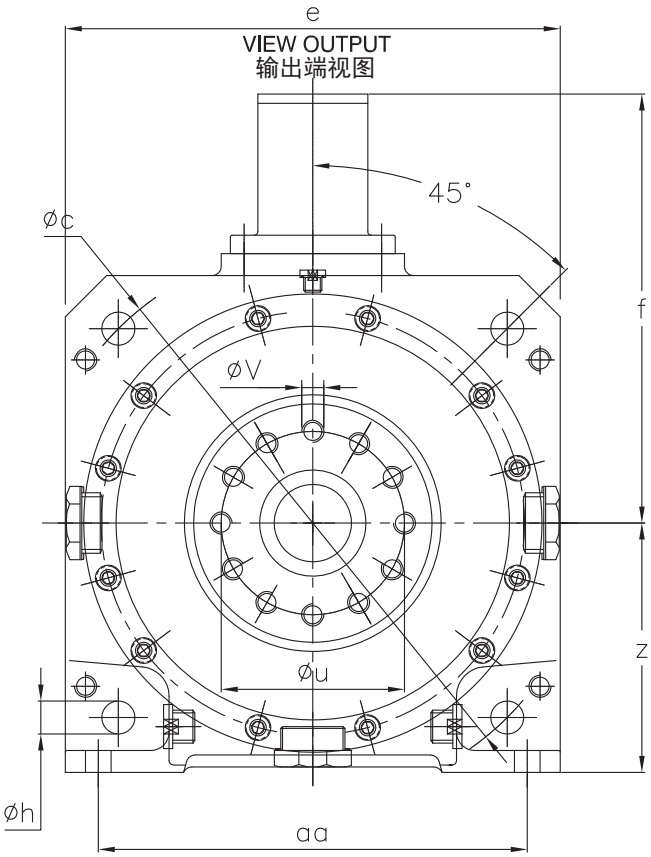

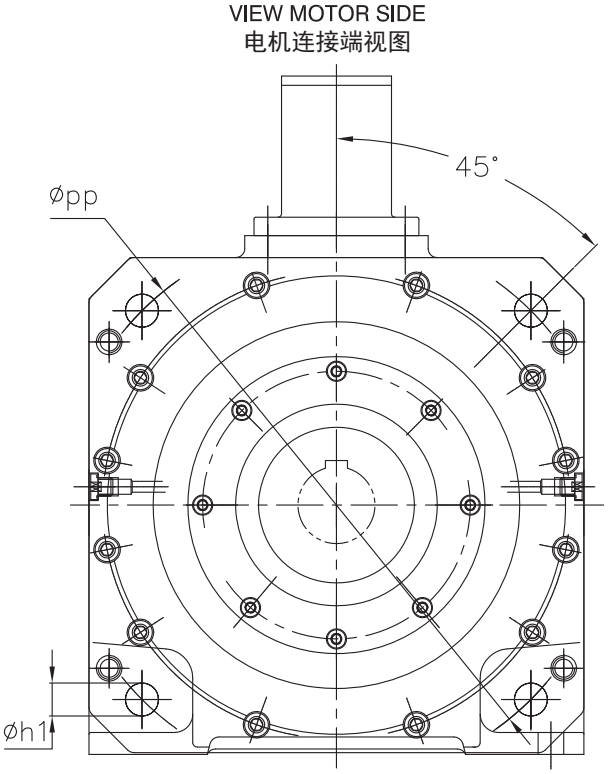

TECHNICAL SPECIFICATIONS
技术规格

DIMENSIONS 尺寸表

CODE 编号	LCG 250		LCG 300	
d	42	55	55	60
SS	250	230	300	300
pp	300	265	350	350
h1	18	15	18	19
b	250		250	
c	300		350	
h	18		18	
z	136		164	
e	270		318	
f	234		254	
aa	234		290	
bb	46		46	
cc	58		58	
w	14		14	
D	118		130	
a	58		65	
g	120		140	
u	100		100	
v	M12 (12x)		M12 (12x)	
dd	42		55	
ee	72		112	
ff	70		110	
gg	60		90	
hh	5		10	
mm	12		16	
nn	48		63	
L	391.5		391.5	
m	200		200	
n	171.5		171.5	
p	29		29	
q	106.5		109	
s	22		22	
t	20		20	
LL	420		460	

PERFORMANCES 性能参数

SIZE/RATIO 规格/变速比	RATIO 变速比 i	OUTPUT TORQUE 输出扭矩 (Nm)	NOMINAL POWER 功率 (kW)	MAX INPUT SPEED 最大输入转速 (rpm)
LCG 250/316	1,00 3,16	250 790	39	6300*
LCG 250/400	1,00 4,00	250 1000		
LCG 250/550	1,00 5,50	250 1375		
LCG 300/316	1,00 3,16	300 950	47	
LCG 300/400	1,00 4,00	300 1200		
LCG 300/550	1,00 5,50	250 1375		

* ONLY FOR OIL COOLER
* 仅适于油润滑

INSTALLATION POSITION 安装方式

xx = 01	xx = 02
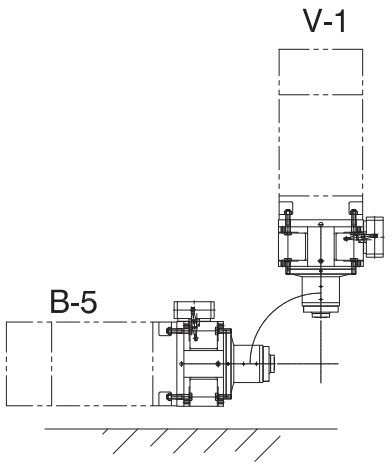	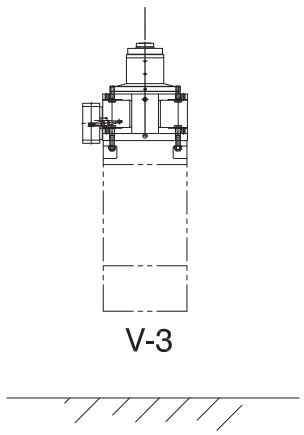

ELECTRICAL CONNECTION FOR SHIFT UNIT (E1) 换挡机构电气参数 (E1)	STANDARD RECIRCULATING LUBRICATION (V1/B5) 标准循环润滑 (V1/B5)	STANDARD RECIRCULATING LUBRICATION (V3) 标准循环润滑 (V3)
V = 24 Volt W = 24 Watt A = 1 Ampere	OIL FLOW 流量 1,0 l/min OIL PRESS. 油压 1,5 bar	OIL FLOW 流量 1,5 l/min OIL PRESS. 油压 1,5 bar

ORDERING NUMBERS MAP
订货号说明

LCG- XXX / XXX / XX / X / XX / XXX / XXXX / X

SIZE 规格

250	
300	

RATIO 变速比

1:3,16	316
1:4	400
1:5,5	550

POSITION 安装方式

V1/B5	01
V3	02

MOTOR BALANCING 电机平衡方式

FULL KEY 全键	P
HALF KEY 半键	M

MOTOR SHAFT DIAMETER "dd" 电机轴直径 "dd"

42
48
55
60

MOTOR MATCH DIAMETER "ss" 电机止口直径 "ss"

230
250
300

SHAFT DIAMETER OUTPUT 输出轴直径--带键 WITH KEY	42CC
SHAFT DIAMETER OUTPUT 输出轴直径--不带键 WITHOUT KEY	42SC
FLANGE DIAMETER OUTPUT 输出法兰直径	0118
SHAFT DIAMETER OUTPUT 输出轴直径--带键 WITH KEY	55CC
SHAFT DIAMETER OUTPUT 输出轴直径--不带键 WITHOUT KEY	55SC
FLANGE DIAMETER OUTPUT 输出法兰直径	0130

CYLINDRICAL ROLLER 圆柱滚子轴承	R
ANGULAR-CONTACT BALL BEARINGS 角接触球轴承	O

ORDERING DRAWING
订货图

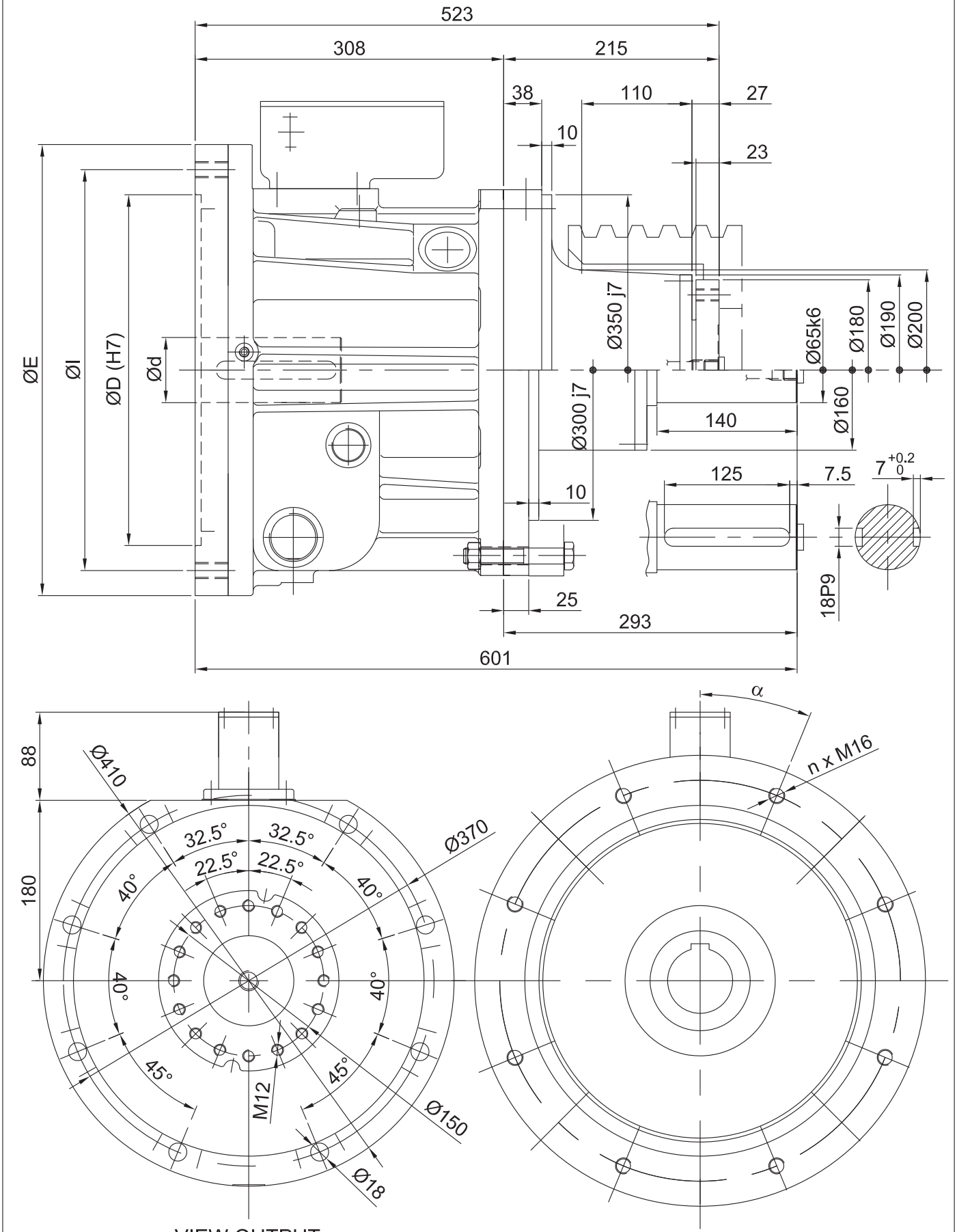

VIEW OUTPUT
输出端视图

VIEW MOTOR SIDE
电机连接端视图

TECHNICAL SPECIFICATIONS
技术规格

PERFORMANCES 性能参数				
SIZE/RATIO 规格/变速比	RATIO 变速比 i	OUTPUT TORQUE 输出扭矩 (Nm)	NOMINAL POWER 功率 (kW)	MAX INPUT SPEED 最大输入转速 (rpm)
LCG 800/318	1,00 3,18	800 2540	84	5000
LCG 800/400	1,00 4,00	800 3200		

SIZE 规格	CODE 编号	DIMENSIONS 尺寸		
LCG 800	d	60	65	75
	D	300	350	450
	l	350	400	500
	E	450	450	550
	n	4	8	8
	α	45°	22°30'	22°30'

INSTALLATION POSITION 安装方式	
xx = 01	xx = 02
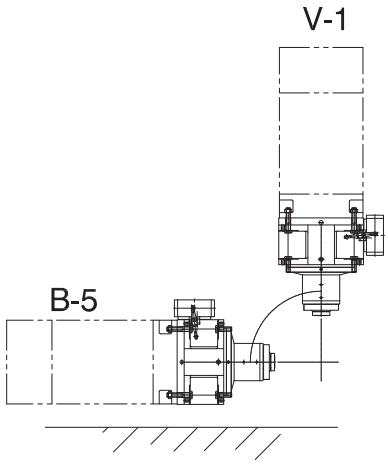	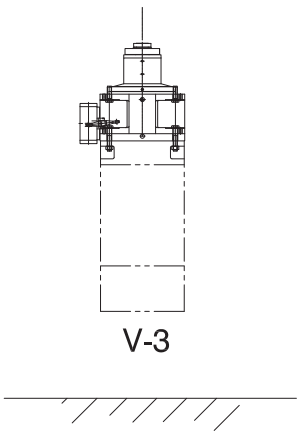

ELECTRICAL CONNECTION FOR SHIFT UNIT (E1) 换挡机构电气参数 (E1)	STANDARD RECIRCULATING LUBRICATION (V1/B5) 标准循环润滑 (V1/B5)		STANDARD RECIRCULATING LUBRICATION (V3) 标准循环润滑 (V3)	
V = 24 Volt W = 24 Watt A = 1 Ampere	OIL FLOW 流量 OIL PRESS. 油压	1,0 l/min 1,5 bar	OIL FLOW 流量 OIL PRESS. 油压	1,5 l/min 1,5 bar

ORDERING NUMBERS MAP
订货号说明

LCG-XXX / XXX / XX / X / XX / XXX / XXXX / X

SIZE 规格

800	

RATIO 变速比

1:3,18	318
1:4	400

POSITION 安装方式

V1/B5	01
V3	02

MOTOR BALANCING 电机平衡方式

FULL KEY 全键	P
HALF KEY 半键	M

MOTOR SHAFT DIAMETER "d" 电机轴直径"d"

60
65
75

MOTOR MATCH DIAMETER "D" 电机止口直径"D"

300
350
450

SHAFT DIAMETER OUTPUT 输出轴直径--带键 WITH KEY	65CC
SHAFT DIAMETER OUTPUT 输出轴直径--不带键 WITHOUT KEY	65SC
FLANGE DIAMETER OUTPUT 输出法兰直径	0180

CYLINDRICAL ROLLER 圆柱滚子轴承	R
ANGULAR-CONTACT BALL BEARINGS 角接触球轴承	O

LICAT
RACKS & GEARS

Via Don Ettore Gaia, 19
10043 Orbassano (TO) Italy
Tel. +39 011 957 64 04
info@licat.it
licat.it

ROMANI
COMPONENTS

Via Alcide De Gasperi, 146
20017 Rho (MI) Italy
Tel. +39 02 93906069
info@romanicomponents.it
romanicomponents.it